University of Nebraska - Lincoln
DigitalCommons@University of Nebraska - Lincoln

Nebraska Tractor Tests

Tractor Test and Power Museum, The Lester F. Larsen

2016

Nebraska Summary: S1125 Challenger MT485E

Nebraska Tractor Test Lab
University of Nebraska-Lincoln, tractortestlab@unl.edu

Follow this and additional works at: https://digitalcommons.unl.edu/tractormuseumlit

 Part of the Energy Systems Commons, History of Science, Technology, and Medicine Commons, Other Mechanical Engineering Commons, Physical Sciences and Mathematics Commons, Science and Mathematics Education Commons, and the United States History Commons

Nebraska Tractor Test Lab, "Nebraska Summary: S1125 Challenger MT485E" (2016). *Nebraska Tractor Tests*. 3391.
https://digitalcommons.unl.edu/tractormuseumlit/3391

This Article is brought to you for free and open access by the Tractor Test and Power Museum, The Lester F. Larsen at DigitalCommons@University of Nebraska - Lincoln. It has been accepted for inclusion in Nebraska Tractor Tests by an authorized administrator of DigitalCommons@University of Nebraska - Lincoln.

SUMMARY OF OECD TEST 3031–NEBRASKA SUMMARY 1125
CHALLENGER MT485E AP4 DIESEL
16 SPEED

POWER TAKE-OFF PERFORMANCE

Power HP *(kW)*	Crank shaft speed rpm	Diesel Consumption Gal/hr *(l/h)*	lb/hp.hr *(kg/kW.h)*	D.E.F. Consumption Hp.hr/gal *(kW.h/l)*	Gal/hr *(l/h)*	Mean Atmospheric Conditions
MAXIMUM POWER AND FUEL CONSUMPTION						
Rated Engine Speed—(PTO speed—1033 rpm)						
132.4 *(98.7)*	2097	8.33 *(31.52)*	0.439 *(0.267)*	15.89 *(3.13)*	0.51 *(1.93)*	
Standard Power Take-off Speed (1000 rpm)						
139.5 *(104.0)*	2029	8.57 *(32.43)*	0.429 *(0.261)*	16.28 *(3.21)*	0.54 *(2.06)*	
Maximum Power (1 hour)						
144.0 *(107.4)*	1901	8.58 *(32.49)*	0.416 *(0.253)*	16.78 *(3.30)*	0.59 *(2.25)*	
VARYING POWER AND FUEL CONSUMPTION						
132.4 *(98.7)*	2097	8.33 *(31.52)*	0.439 *(0.267)*	15.89 *(3.13)*	0.51 *(1.93)*	Air temperature
113.6 *(84.7)*	2116	7.27 *(27.51)*	0.446 *(0.272)*	15.63 *(3.08)*	0.35 *(1.32)*	70°F *(21°C)*
85.6 *(63.8)*	2124	5.85 *(22.15)*	0.477 *(0.290)*	14.62 *(2.88)*	0.27 *(1.02)*	Relative humidity
57.3 *(42.7)*	2135	4.54 *(17.19)*	0.553 *(0.336)*	12.62 *(2.49)*	0.17 *(0.65)*	37%
28.7 *(21.4)*	2139	3.31 *(12.51)*	0.803 *(0.488)*	8.68 *(1.71)*	0.13 *(0.50)*	Barometer
--- ---	2152	2.15 *(8.12)*	--- ---	--- ---	0.08 *(0.30)*	30.1" Hg *(102.0 kPa)*

Maximum torque - 457 lb.-ft. *(619 Nm)* at 1503 rpm
Maximum torque rise - 37.8%
Torque rise at 1700 engine rpm - 31%
Power increase at 1901 engine rpm - 9%

DRAWBAR PERFORMANCE
(Unballasted - Front Drive Engaged)
FUEL CONSUMPTION CHARACTERISTICS

Power Hp *(kW)*	Drawbar pull lbs *(kN)*	Speed mph *(km/h)*	Crank-shaft speed rpm	Slip %	Fuel Consumption lb/hp.hr *(kg/kW.h)*	Hp.hr/gal *(kW.h/l)*	Temp.°F *(°C)* cool-ing med	Air dry bulb	Barom. inch Hg *(kPa)*
Power at Rated Engine Speed—9th(3A) Gear									
111.7 *(83.3)*	7015 *(31.2)*	5.97 *(9.61)*	2097	2.3	0.525 *(0.319)*	13.16 *(2.59)*	181 *(83)*	50 *(10)*	30.1 *(101.8)*
75% of Pull at Rated Engine Speed—9th(3A) Gear									
84.5 *(63.0)*	5240 *(23.3)*	6.05 *(9.73)*	2123	1.6	0.582 *(0.354)*	11.88 *(2.34)*	180 *(82)*	52 *(11)*	30.1 *(101.8)*
50% of Pull at Rated Engine Speed—9th(3A) Gear									
57.7 *(43.0)*	3505 *(15.6)*	6.17 *(9.92)*	2133	0.8	0.663 *(0.403)*	10.42 *(2.05)*	178 *(81)*	52 *(11)*	30.1 *(101.8)*
75% of Pull at Reduced Engine Speed—10th(3B) Gear									
85.3 *(63.6)*	5240 *(23.3)*	6.10 *(9.82)*	1735	1.6	0.524 *(0.319)*	13.20 *(2.60)*	178 *(81)*	54 *(12)*	30.1 *(101.8)*
50% of Pull at Reduced Engine Speed—10th(3B) Gear									
57.8 *(43.1)*	3505 *(15.6)*	6.18 *(9.95)*	1738	0.8	0.594 *(0.361)*	11.62 *(2.29)*	176 *(80)*	54 *(12)*	30.1 *(101.8)*

Location of tests: IRSTEA, Centre d'Antony, 1 rue Pierre-Gilles de Gennes CS 10030, Antony, France 92761

Dates of tests: October, 2016

Manufacturer: AGCO S.A.S 41, Avenue Blaise Pascal, 60000 Beauvais, France

CONSUMABLE Fluids and OIL: Fuel No. 2 Diesel **Specific gravity converted to 60°/60°F** *(15°/15°C)* 0.838 **Fuel weight** 6.98 lbs/gal *(0.836 kg/l)* **Diesel Exhaust Fluid (DEF)** 32% aqueous urea solution **DEF weight** 9.08 lbs/gal *(1.091 kg/l)* **Oil SAE** 15W40 **API service classification** CJ-4 **Transmission and hydraulic lubricant** BP Terrac Tractan 9 15W/40 **Front axle lubricant** SAE 85W140 API GL-5

ENGINE: Make AGCO Power Diesel **Type** four cylinder vertical with turbocharger, air to air intercooler and SCR (selective catalyst reduction) exhaust treatment **Serial No.** Z00099 **Crankshaft** lengthwise **Rated engine speed** 2100 **Bore and stroke** 4.252" x 5.276" *(108.0 mm x 134.0 mm)* **Compression ratio** 17.8 to 1 **Displacement** 299 cu in *(4910 ml)* **Starting system** 12 volt **Lubrication** pressure **Air cleaner** two paper elements **Oil filter** one full flow cartridge **Oil cooler** engine coolant heat exchanger for crankcase oil, radiator for hydraulic and transmission oil **Fuel filter** two paper cartridges **Exhaust** DOC (diesel oxidation catalyst) and SCR (selective catalyst reduction) within a vertical muffler **Cooling medium temperature control** thermostat and variable speed fan

CHASSIS: Type front wheel assist **Serial No.** B 079 901 **Tread width** rear 66.3" *(1685 mm)* to 96.7" *(2455 mm)* front 60.2" *(1530 mm)* to 89.8" *(2280 mm)* **Wheelbase** 105.1" *(2670 mm)* **Hydraulic control system** direct engine drive **Transmission** selective gear fixed ratio with partial (4) range operator controlled powershift **Nominal travel speeds mph *(km/h)*** first 1.24 *(2.00)* second 1.53 *(2.46)* third 1.86 *(3.00)* fourth 2.29 *(3.69)* fifth 2.95 *(4.74)* sixth 3.62 *(5.83)* seventh 4.42 *(7.11)* eighth 5.43 *(8.74)* ninth 5.98 *(9.62)* tenth 7.36 *(11.84)* eleventh 8.97 *(14.44)* twelfth 11.04 *(17.76)* thirteenth 15.09 *(24.29)* fourteenth 18.57 *(29.88)* fifteenth 22.64 *(36.44)* sixteenth 24.86 *(40.00)* electronically limited reverse 1.24 *(2.00)*, 1.53 *(2.46)*, 1.86 *(3.00)*, 2.29 *(3.69)*, 2.95 *(4.74)*, 3.62 *(5.83)*, 4.42 *(7.11)*, 5.43 *(8.74)*, 5.98 *(9.62)*, 7.36 *(11.84)*, 8.97 *(14.44)*, 11.04 *(17.76)*, 15.09 *(24.29)*, 18.57 *(29.88)*, 22.64 *(36.44)*, 24.86 *(40.00)* electronically limited

DRAWBAR PERFORMANCE

(Unballasted - Front Drive Engaged)
MAXIMUM POWER IN SELECTED GEARS

Power Hp *(kW)*	Drawbar pull lbs *(kN)*	Speed mph *(km/h)*	Crank-shaft speed rpm	Slip %	Fuel Consumption lb/hp.hr *(kg/kW.h)*	Hp.hr/gal *(kW.h/l)*	Temp.°F(°C) cool-ing med	Air dry bulb	Barom. inch Hg *(kPa)*
				2nd(1B) Gear					
46.5 *(34.7)*	12950 *(57.6)*	1.35 *(2.17)*	2133	13.5	0.727 *(0.442)*	9.51 *(1.87)*	178 *(81)*	61 *(16)*	30.0 *(101.6)*
				3rd(1C) Gear					
56.5 *(42.1)*	12860 *(57.2)*	1.65 *(2.65)*	2127	12.9	0.674 *(0.410)*	10.25 *(2.02)*	178 *(81)*	61 *(16)*	30.0 *(101.6)*
				4th(1D) Gear					
68.4 *(51.0)*	12475 *(55.5)*	2.06 *(3.31)*	2116	11.2	0.630 *(0.383)*	10.96 *(2.16)*	178 *(81)*	61 *(16)*	30.0 *(101.5)*
				5th(2A) Gear					
90.4 *(67.4)*	12680 *(56.4)*	2.67 *(4.30)*	2110	10.7	0.570 *(0.347)*	12.12 *(2.39)*	178 *(81)*	59 *(15)*	30.0 *(101.6)*
				6th(2B) Gear					
103.9 *(77.5)*	11575 *(51.5)*	3.37 *(5.42)*	2056	6.3	0.538 *(0.327)*	12.84 *(2.53)*	178 *(81)*	61 *(16)*	30.0 *(101.6)*
				7th(2C) Gear					
111.8 *(83.4)*	10025 *(44.6)*	4.18 *(6.73)*	2034	4.0	0.510 *(0.310)*	13.55 *(2.67)*	178 *(81)*	46 *(8)*	30.1 *(101.8)*
				8th(2D) Gear					
109.0 *(81.3)*	8500 *(37.8)*	4.81 *(7.74)*	1899	3.1	0.508 *(0.309)*	13.60 *(2.68)*	178 *(81)*	48 *(9)*	30.1 *(101.8)*
				*9th(3A) Gear					
124.6 *(92.9)*	8810 *(39.2)*	5.30 *(8.53)*	1899	3.3	0.484 *(0.294)*	14.27 *(2.81)*	183 *(84)*	50 *(10)*	30.1 *(101.8)*
				*10th(3B) Gear					
123.5 *(92.1)*	7015 *(31.2)*	6.60 *(10.63)*	1909	2.3	0.484 *(0.295)*	14.26 *(2.81)*	183 *(84)*	52 *(11)*	30.1 *(101.8)*
				*11th(3C) Gear					
121.5 *(90.6)*	5645 *(25.1)*	8.07 *(12.99)*	1905	1.8	0.496 *(0.302)*	13.94 *(2.75)*	183 *(84)*	61 *(16)*	30.0 *(101.6)*
				*12th(3D) Gear					
113.6 *(84.7)*	4340 *(19.3)*	9.82 *(15.80)*	1898	1.5	0.519 *(0.316)*	13.30 *(2.62)*	183 *(84)*	61 *(16)*	30.0 *(101.6)*

* boosted power mode

TRACTOR SOUND LEVEL WITH CAB	Front wheel drive Engaged dB(A)	Front wheel drive Disengaged dB(A)
At no load in 7th(2C) gear	70.0	70.0
Bystander		--

Horizontal distances of drawbar hitch point behind rear wheel axis - 28.5 in *(725 mm)*, 34.4 in *(875 mm)*

TIRES, BALLAST AND WEIGHT	Tested without ballast
Rear Tires - No., size, ply & psi*(kPa)*	Two 520/85R38;**;14*(100)*
Front Tires - No., size, ply & psi*(kPa)*	Two 480/70R28;**;14*(100)*
Height of Drawbar	19.7 in *(500 mm)*
Static Weight with operator - Rear	8170 lb *(3705 kg)*
- Front	6490 lb *(2945 kg)*
- Total	14660 lb *(6650 kg)*

Clutch multiple wet disc operated by foot pedal **Brakes** multiple wet disc hydraulically operated by two foot pedals that can be locked together **Steering** hydrostatic **Power take-off** 540 rpm at 1982 engine rpm or 1000 rpm at 2030 engine rpm **Unladen tractor mass** 14495 lb *(6575 kg)*

NOTE 1: This tractor has an engine control feature that allows the engine to run in a "boosted" mode, increased power level, when the tractor is operated during stationary PTO operations and when the tractor is operated in drawbar ranges 3 and 4.

NOTE 2: The data on this summary was obtained from OECD report 3031 conducted on the Massey Ferguson 6715S Dyna 4 Diesel.

REPAIRS AND ADJUSTMENTS: No repairs or adjustments.

REMARKS: All test results were determined from observed data obtained in accordance with official OECD test procedures. This tractor fell 3.1% short of meeting the manufacturer's remote hydraulic flow claim of 26 GPM with the standard pump. The performance figures on this summary were taken from a test conducted under the OECD Code 2 test procedure.

We, the undersigned, certify that this is a true summary of data from OECD Report No. **3031,** Nebraska Summary 1125, February 23, 2018.

Roger M. Hoy
Director

M.F. Kocher
P.J. Jasa
J.D. Luck
Board of Tractor Test Engineers

The data presented here is from a test series conducted on the Massey Ferguson 7715 Dyna VT and 7715 Dyna 6, OECD Approval Numbers 2/2988 and 2/2991 and Nebraska Summary Numbers 1060 and 1059.

HYDRAULIC PERFORMANCE

CATEGORY: 3, NAO lower links		
Quick Attach: None		
OECD Static test		
Maximum force exerted through whole range:	16750 lbs *(74.5 kN)*	
i) Sustained pressure of the open relief valve:	2915 psi *(201 bar)*	
	Standard Pump	Optional pump
	26 GPM *(100 l/min)*	29 GPM *(110 l/min)*
	two outlet sets combined	two outlet sets combined
ii) Pump delivery rate at minimum pressure:	25.2 GPM *(95.5 l/min)*	29.6 GPM *(112.1 l/min)*
iii) Pump delivery rate at maximum hydraulic power:	23.8 GPM *(90.0 l/min)*	27.0 GPM *(102.3 l/min)*
Delivery pressure:	2380 psi *(164 bar)*	2725 psi *(188 bar)*
Power:	33.0 HP *(24.6 kW)*	42.9 HP *(32.0 kW)*
	single outlet set	single outlet set
ii) Pump delivery rate at minimum pressure:	25.3 GPM *(95.6 l/min)*	30.2 GPM *(114.2 l/min)*
iii) Pump delivery rate at maximum hydraulic power:	23.9 GPM *(90.5 l/min)*	27.5 GPM *(104.0 l/min)*
Delivery pressure:	2160 psi *(149 bar)*	2470 psi *(170 bar)*
Power:	30.1 HP *(22.5 kW)*	39.6 HP *(29.5 kW)*

HITCH DIMENSIONS AS TESTED—NO LOAD

	inch	*mm*
A	28.7	*730*
B	11.6	*295*
C	13.9	*354*
D	13.0	*330*
E	9.9	*251*
F	11.0	*280*
G	34.4	*875*
H	1.7	*43*
I	15.5	*394*
J	23.4	*595*
K	21.4	*543*
L	43.3	*1101*
M	24.6	*625*
N	37.0	*940*
O	8.9	*226*
P	50.4	*1280*
Q	36.9	*938*
R	30.3	*770*

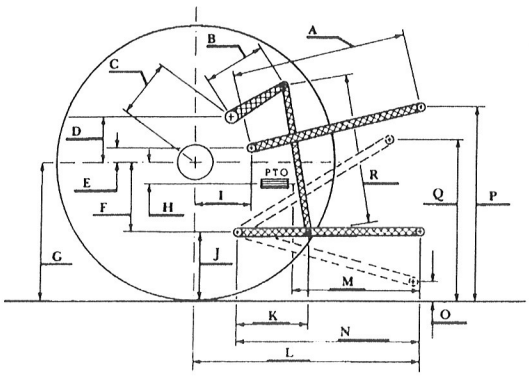

RECOMMENDED CITATION FORMAT:
NTTL.(2018). OECD tractor test 3031 for Challenger MT485E AP4 Diesel.
Lincoln, NE:Nebraska Tractor Test Laboratory. Retrieved from http://tractortestlab.unl.edu