University of Nebraska - Lincoln
DigitalCommons@University of Nebraska - Lincoln

Nebraska Tractor Tests

Tractor Test and Power Museum, The Lester F. Larsen

2018

Nebraska Summary: S1150 Challenger 1050

Nebraska Tractor Test Lab
University of Nebraska-Lincoln, tractortestlab@unl.edu

Follow this and additional works at: https://digitalcommons.unl.edu/tractormuseumlit

 Part of the Energy Systems Commons, History of Science, Technology, and Medicine Commons, Other Mechanical Engineering Commons, Physical Sciences and Mathematics Commons, Science and Mathematics Education Commons, and the United States History Commons

Nebraska Tractor Test Lab, "Nebraska Summary: S1150 Challenger 1050" (2018). *Nebraska Tractor Tests*. 3371.
https://digitalcommons.unl.edu/tractormuseumlit/3371

This Article is brought to you for free and open access by the Tractor Test and Power Museum, The Lester F. Larsen at DigitalCommons@University of Nebraska - Lincoln. It has been accepted for inclusion in Nebraska Tractor Tests by an authorized administrator of DigitalCommons@University of Nebraska - Lincoln.

SUMMARY OF OECD TEST 3107 - NEBRASKA SUMMARY 1150
CHALLENGER 1050 DIESEL
CONTINIOUSLY VARIABLE TRANSMISSION

POWER TAKE-OFF PERFORMANCE

Power HP *(kW)*	Crank shaft speed rpm	Diesel Consumption Gal/hr *(l/h)*	lb/hp.hr *(kg/kW.h)*	D.E.F. Consumption Hp.hr/gal *(kW.h/l)*	D.E.F. Consumption Gal/hr *(l/h)*	Mean Atmospheric Conditions
MAXIMUM POWER AND FUEL CONSUMPTION						
Rated Engine Speed—(PTO speed—1053 rpm)						
483.2 *(360.3)*	1700	23.72 *(89.80)*	0.340 *(0.207)*	20.37 *(4.01)*	1.55 *(5.87)*	
Standard Power Take-off Speed (1000 rpm)						
484.6 *(361.4)*	1614	23.59 *(89.30)*	0.337 *(0.205)*	20.54 *(4.05)*	1.64 *(6.22)*	
Maximum Power (1 hour)						
485.0 *(361.7)*	1500	23.56 *(89.20)*	0.335 *(0.204)*	20.58 *(4.06)*	1.78 *(6.73)*	
VARYING POWER AND FUEL CONSUMPTION						
483.2 *(360.3)*	1700	23.72 *(89.80)*	0.340 *(0.207)*	20.37 *(4.01)*	1.55 *(5.87)*	Air temperature
420.8 *(313.8)*	1742	20.76 *(78.60)*	0.342 *(0.208)*	20.27 *(3.99)*	1.20 *(4.55)*	72°F *(22°C)*
318.3 *(237.3)*	1757	16.43 *(62.22)*	0.357 *(0.217)*	19.36 *(3.81)*	0.52 *(1.98)*	Relative humidity
213.8 *(159.5)*	1770	12.12 *(45.90)*	0.391 *(0.238)*	17.64 *(3.48)*	0.44 *(1.65)*	26%
108.3 *(80.7)*	1793	7.85 *(29.70)*	0.501 *(0.305)*	13.79 *(2.72)*	0.45 *(1.70)*	Barometer
-- --	1807	4.15 *(15.70)*	-- --	-- --	0.13 *(0.63)*	29.1" Hg *(98.5 kPa)*

Maximum torque - 1698 lb.-ft. *(2302 Nm)* at 1500 rpm
Maximum torque rise - 13.7%
Torque rise at 1400 engine rpm - 13%
Power increase at 1500 engine rpm - 0.4%

DRAWBAR PERFORMANCE
UNBALLASTED - FRONT DRIVE ENGAGED
FUEL CONSUMPTION CHARACTERISTICS

Power Hp *(kW)*	Drawbar pull lbs *(kN)*	Speed mph *(km/h)*	Crank-shaft speed rpm	Slip %	Fuel Consumption lb/hp.hr *(kg/kW.h)*	Fuel Consumption Hp.hr/gal *(kW.h/l)*	D.E.F. Consumption lb/hp.hr *(kg/kW.h)*	Temp.°F*(°C)* cool-ing med	Air dry bulb	Barom. inch Hg *(kPa)*
Power at Rated Engine Speed— Speed setting 9										
413.3 *(308.2)*	27735 *(123.36)*	5.59 *(8.99)*	1699	3.3	0.399 *(0.243)*	17.36 *(3.42)*	0.035 *(0.021)*	201 *(94)*	57 *(14)*	29.8 *(100.8)*
75% of Pull at Rated Engine Speed—Speed setting 9										
326.0 *(243.2)*	20885 *(92.90)*	5.85 *(9.42)*	1752	1.9	0.404 *(0.246)*	17.11 *(3.37)*	0.038 *(0.023)*	201 *(94)*	59 *(15)*	29.8 *(100.8)*
50% of Pull at Rated Engine Speed— Speed setting 9										
223.5 *(166.7)*	13885 *(61.77)*	6.04 *(9.71)*	1770	1.2	0.432 *(0.263)*	16.04 *(3.16)*	0.035 *(0.021)*	201 *(94)*	59 *(15)*	29.8 *(100.8)*
75% of Pull at Reduced Engine Speed—Speed setting - 11										
324.7 *(242.1)*	20820 *(92.61)*	5.85 *(9.41)*	1435	2.0	0.380 *(0.231)*	18.22 *(3.59)*	0.035 *(0.021)*	201 *(94)*	59 *(15)*	29.8 *(100.8)*
50% of Pull at Reduced Engine Speed—Speed setting - 11										
222.9 *(166.2)*	13890 *(61.78)*	6.02 *(9.69)*	1456	1.3	0.395 *(0.240)*	17.56 *(3.46)*	0.044 *(0.027)*	201 *(94)*	61 *(16)*	29.8 *(100.8)*

Location of tests: DLG e.V. Test Centre, Technology and Farm inputs, Max-Eyth-Weg 1, D-64823 Gross-Umstadt, Germany

Dates of tests: November, 2017 to January, 2018

Manufacturer: AGCO GmbH Johann Georg Fendt Str 4 D 87616 Marktoberdorf Germany

CONSUMABLE Fluids: Fuel No. 2 Diesel **Specific gravity converted to 60°/60°F *(15°/15°C)*** 0.8314 **Fuel weight** 6.93 lbs/gal *(0.830 kg/l)* **Diesel Exhaust Fluid (DEF)** 32% aqueous urea solution **DEF weight** 9.071 lbs/gal *(1.087 kg/l)* **Oil SAE** 5W-30 **API service classification** CJ-4 **Transmission and hydraulic lubricant** MAN M3277 fluid **Front axle lubricant** MAN M3277 fluid

ENGINE: Make MAN Diesel **Type** six cylinder vertical with turbocharger, air to air intercooler and D.E.F. (diesel exhaust fluid) exhaust treatment **Serial No.** 52246840514658 **Crankshaft** lengthwise **Rated engine speed** 1700 **Bore and stroke** 4.960 x 6.535" *(126.0 mm x 166.0 mm)* **Compression ratio** 17.0 to 1 **Displacement** 758 cu in *(12419 ml)* **Starting system** 24 volt **Lubrication** pressure **Air cleaner** two paper elements and aspirator **Oil filter** one full flow cartridge **Oil cooler** engine coolant heat exchanger for crankcase oil, radiator for hydraulic and transmission oil **Fuel filter** one paper element and prestrainer **Fuel cooler** radiator for pump return fuel **Exhaust** DOC (diesel oxidation catalyst)/DPF (diesel particulate filter) System and SCR (selective catalyst reduction) with a vertical muffler **Cooling medium temperature control** thermostat and variable speed fan

CHASSIS: Type front wheel assist with independent drive to each axle **Serial No.** 53023119 **Tread width** rear 74.8" *(1900 mm)* to 88.6" *(2250 mm)* front 79.9" *(2030 mm)* to 88.6" *(2250 mm)* **Wheelbase** 129.9" *(3300 mm)* **Hydraulic control system** direct engine drive **Transmission** CVT. A combination of mechanical and hydrostatic sections allow an infinite speed adjustment. **Nominal travel speeds mph *(km/h)*** forward: 0-37 *(0-60)*, reverse: 0-21 *(0-33)* **Clutch** a foot pedal controls the hydrostatic oil flow **Brakes** wet multiple disc hydraulically operated by foot pedal **Steering** hydrostatic **Power take-off** 1000 rpm at 1614 engine rpm **Unladen tractor mass** 31615 lb *(14340 kg)*

DRAWBAR PERFORMANCE

UNBALLASTED - FRONT DRIVE ENGAGED - 1500 ENGINE RPM
MAXIMUM POWER AT SELECTED TRAVEL SPEEDS

Power Hp *(kW)*	Drawbar pull lbs *(kN)*	Speed mph *(km/h)*	Crank-shaft speed rpm	Slip %	Fuel Consumption lb/hp.hr *(kg/kW.h)*	Hp.hr/gal *(kW.h/l)*	D.E.F. Consumption lb/hp.hr *(kg/kW.h)*	Temp.°F(°C) cool-ing med	Air dry bulb	Barom. inch Hg *(kPa)*
					Speed setting 5					
285.1	35765	2.99	1751	9.2	0.440	15.73	0.033	201	61	29.7
(212.6)	*(159.09)*	*(4.81)*			*(0.268)*	*(3.10)*	*(0.020)*	*(94)*	*(16)*	*(100.7)*
					Speed setting 6					
350.8	35170	3.74	1739	7.8	0.423	16.37	0.036	201	61	29.7
(261.6)	*(156.45)*	*(6.02)*			*(0.257)*	*(3.22)*	*(0.022)*	*(94)*	*(16)*	*(100.7)*
					Speed setting 7.5					
397.7	34780	4.29	1608	7.4	0.412	16.80	0.036	199	59	29.8
(296.6)	*(154.70)*	*(6.90)*			*(0.251)*	*(3.31)*	*(0.022)*	*(93)*	*(15)*	*(100.8)*
					Speed setting 9					
413.6	31630	4.90	1500	4.4	0.394	17.56	0.036	201	59	29.8
(308.4)	*(140.69)*	*(7.89)*			*(0.240)*	*(3.46)*	*(0.022)*	*(94)*	*(15)*	*(101.0)*
					Speed setting 11					
420.0	26150	6.02	1505	3.0	0.388	17.87	0.036	201	59	29.8
(313.2)	*(116.33)*	*(9.69)*			*(0.237)*	*(3.52)*	*(0.022)*	*(94)*	*(15)*	*(101.0)*
					Speed setting 13					
420.5	22680	6.95	1502	2.6	0.388	17.87	0.035	199	63	29.4
(313.6)	*(100.88)*	*(11.19)*			*(0.236)*	*(3.52)*	*(0.021)*	*(93)*	*(17)*	*(99.6)*
					Speed setting 15					
421.2	19325	8.17	1513	2.3	0.388	17.87	0.035	199	63	29.4
(314.1)	*(85.97)*	*(13.15)*			*(0.236)*	*(3.52)*	*(0.021)*	*(93)*	*(17)*	*(99.6)*
					Speed setting 17					
419.1	16830	9.34	1502	2.1	0.389	17.82	0.035	199	63	29.4
(312.5)	*(74.87)*	*(15.03)*			*(0.236)*	*(3.51)*	*(0.021)*	*(93)*	*(17)*	*(99.6)*
					Speed setting 19					
414.6	15045	10.34	1508	1.9	0.394	17.58	0.035	199	61	29.4
(309.2)	*(66.92)*	*(16.64)*			*(0.239)*	*(3.46)*	*(0.021)*	*(93)*	*(16)*	*(99.6)*

REPAIRS AND ADJUSTMENTS: No repairs or adjustments.

NOTE: The data on this summary was obtained from OECD report 3107 conducted on the Fendt 1050 S4 Vario Diesel.

REMARKS: All test results were determined from observed data obtained in accordance with official OECD test procedures. This tractor fell 1.0% short of meeting the manufacturer's 3 point lift capacity claim of 18631 lb *(8450 kg)* at ball ends. The manufacturer's hydraulic pump flow claim of 113.5 GPM *(430 l/min)* with 2 pumps was not verified. The performance figures on this summary were taken from a test conducted under the OECD Code 2 test procedure.

We, the undersigned, certify that this is a true summary of data from OECD Report No. **3107,** Nebraska Summary 1150, July 23, 2018.

Roger M. Hoy
Director

M.F. Kocher
P.J. Jasa
J.D. Luck
Board of Tractor Test Engineers

TRACTOR SOUND LEVEL WITH CAB	dB(A)
At no load at speed setting 4.7 mph *(7.5 km/h)*	65.9
Transport at speed setting 37 mph *(60 km/h)*	71.5
Bystander	--

Horizontal distances of drawbar hitch point behind rear wheel axis - 41.5 in *(1053 mm)*, 47.4 in *(1203 mm)*, 53.3 in *(1353 mm)*

TIRES AND WEIGHT	Tested Without Ballast
Rear Tires - No., size, ply & psi*(kPa)*	Two 900/65R46;***;12*(80)*
Front Tires - No., size, ply & psi*(kPa)*	Two 710/60R38;***;12*(80)*
Height of Drawbar	25.6 in *(650 mm)*
Static Weight with operator - Rear	17915 lb *(8125 kg)*
- Front	13700 lb *(6215 kg)*
- Total	31615 lb*(14340 kg)*

HYDRAULIC PERFORMANCE

CATEGORY: 3	
Quick Attach: No, Walterscheid quick couplers	
Maximum force exerted through whole range:	17085 lbs *(76.0 kN)* (at 24"*(610 mm)*behind hitch points)
	18455 lbs *(82.1 kN)* at hitch points
i) Sustained pressure at compensator cutoff:	2850 psi *(197 bar)*
	three outlet sets combined
ii) Pump delivery rate at minimum pressure:	61.3 GPM *(232.0 l/min)*
iii)Pump delivery rate at maximum	
hydraulic power:	58.3 GPM *(220.7 l/min)*
Delivery pressure:	2540 psi *(175 bar)*
Power:	86.3 HP *(64.3 kW)*
	single outlet set
ii) Pump delivery rate at minimum pressure:	44.3 GPM *(167.6 l/min)*
iii)Pump delivery rate at maximum	
hydraulic power:	43.0 GPM *(162.9 l/min)*
Delivery pressure:	2320 psi *(160 bar)*
Power:	58.2 HP *(43.5 kW)*

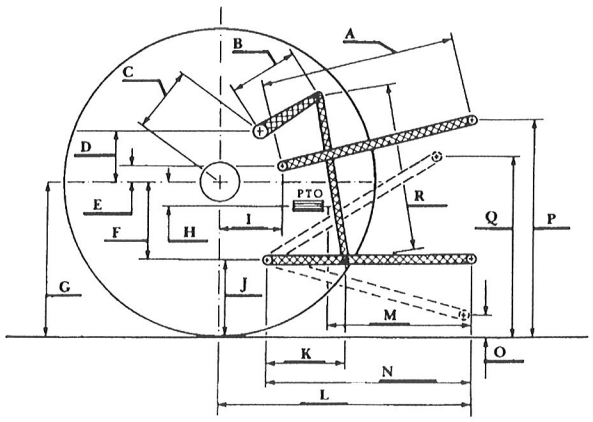

HITCH DIMENSIONS AS TESTED—NO LOAD

	inch	*mm*
A	35.0	*890*
B	15.5	*393*
C	18.6	*473*
D	15.7	*398*
E	3.5	*90*
F	16.9	*430*
G	44.3	*1125*
H	5.4	*136*
I	24.0	*610*
J	27.4	*695*
K	25.3	*642*
L	58.7	*1490*
M	30.8	*782*
N	43.3	*1100*
O	9.1	*230*
P	54.3	*1380*
Q	44.4	*1127*
R	41.4	*1045*

RECOMMENDED CITATION FORMAT:

NTTL.(2018). OECD tractor test 3107 for Challenger 1050 Diesel.
Lincoln, NE:Nebraska Tractor Test Laboratory. Retrieved from http://tractortestlab.unl.edu